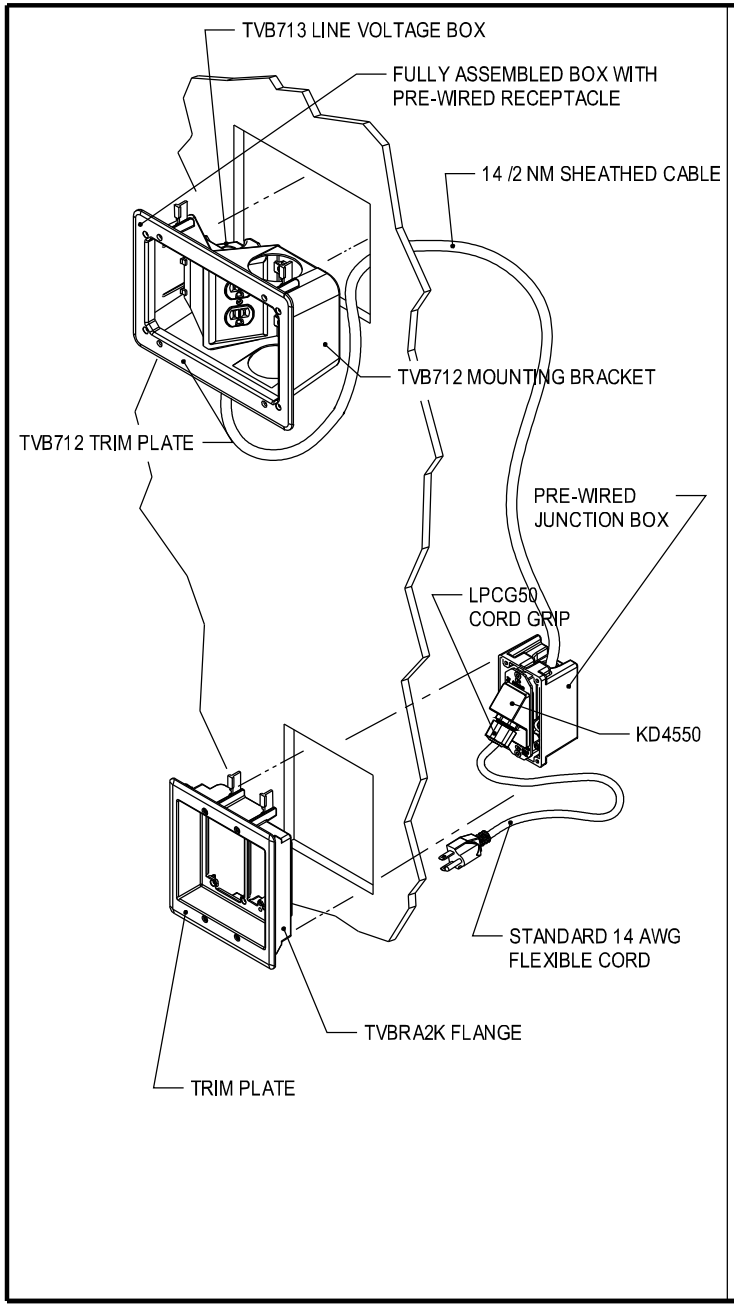
TVB713 LINE VOLTAGE BOX
FULLY ASSEMBLED BOX WITH
PRE-WIRED RECEPTACLE
14 /2 NM SHEATHED CABLE
TVB712 MOUNTING BRACKET
TVB712 TRIM PLATE
PRE-WIRED
JUNCTION BOX
LPCG50
CORD GRIP
KD4550
STANDARD 14 AWG
FLEXIBLE CORD
TVBRA2K FLANGE
TRIM PLATE

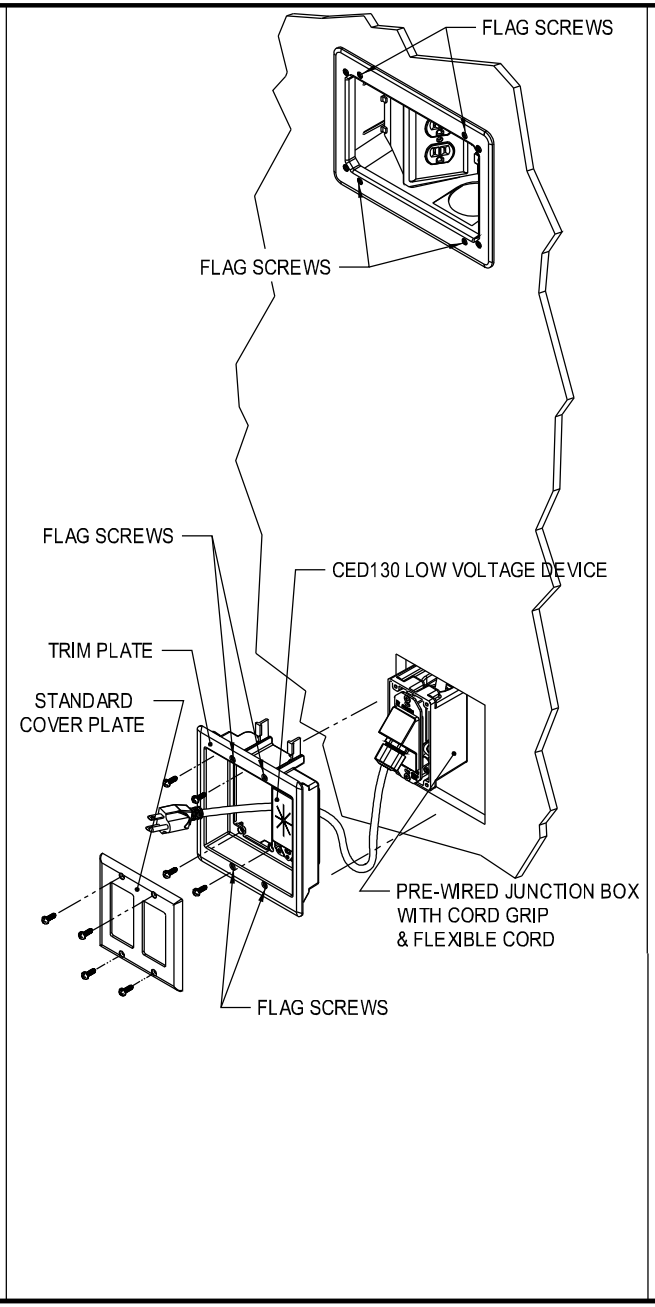
FLAG SCREWS
FLAG SCREWS
FLAG SCREWS
CED130 LOW VOLTAGE DEVICE
TRIM PLATE
STANDARD
COVER PLATE
PRE-WIRED JUNCTION BOX
WITH CORD GRIP
& FLEXIBLE CORD
FLAG SCREWS

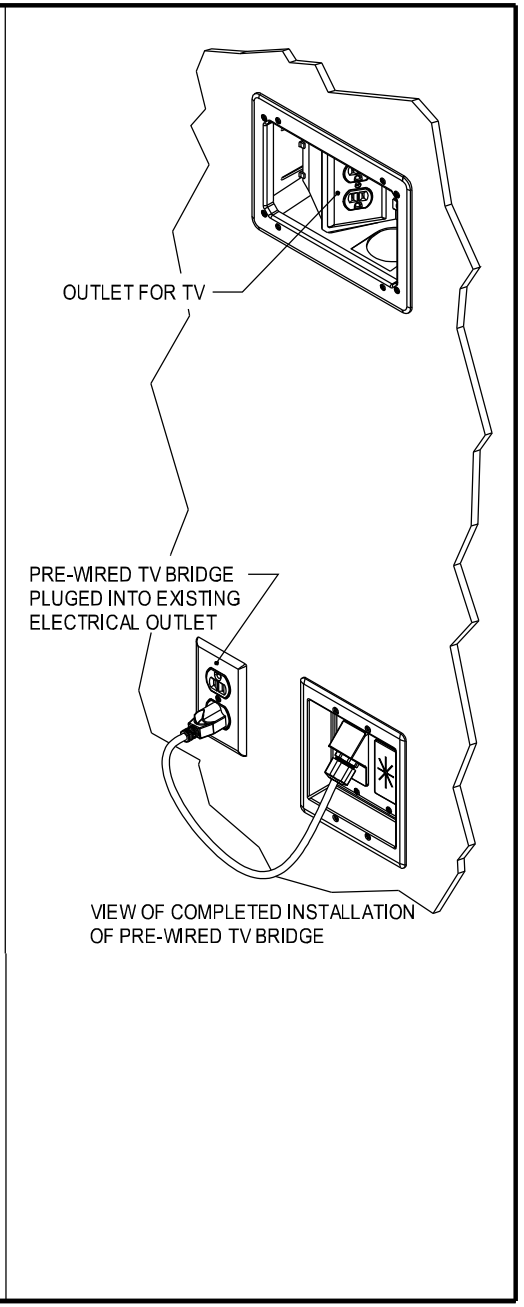
OUTLET FOR TV
PRE-WIRED TV BRIDGE
PLUGED INTO EXISTING
ELECTRICAL OUTLET
VIEW OF COMPLETED INSTALLATION
OF PRE-WIRED TV BRIDGE